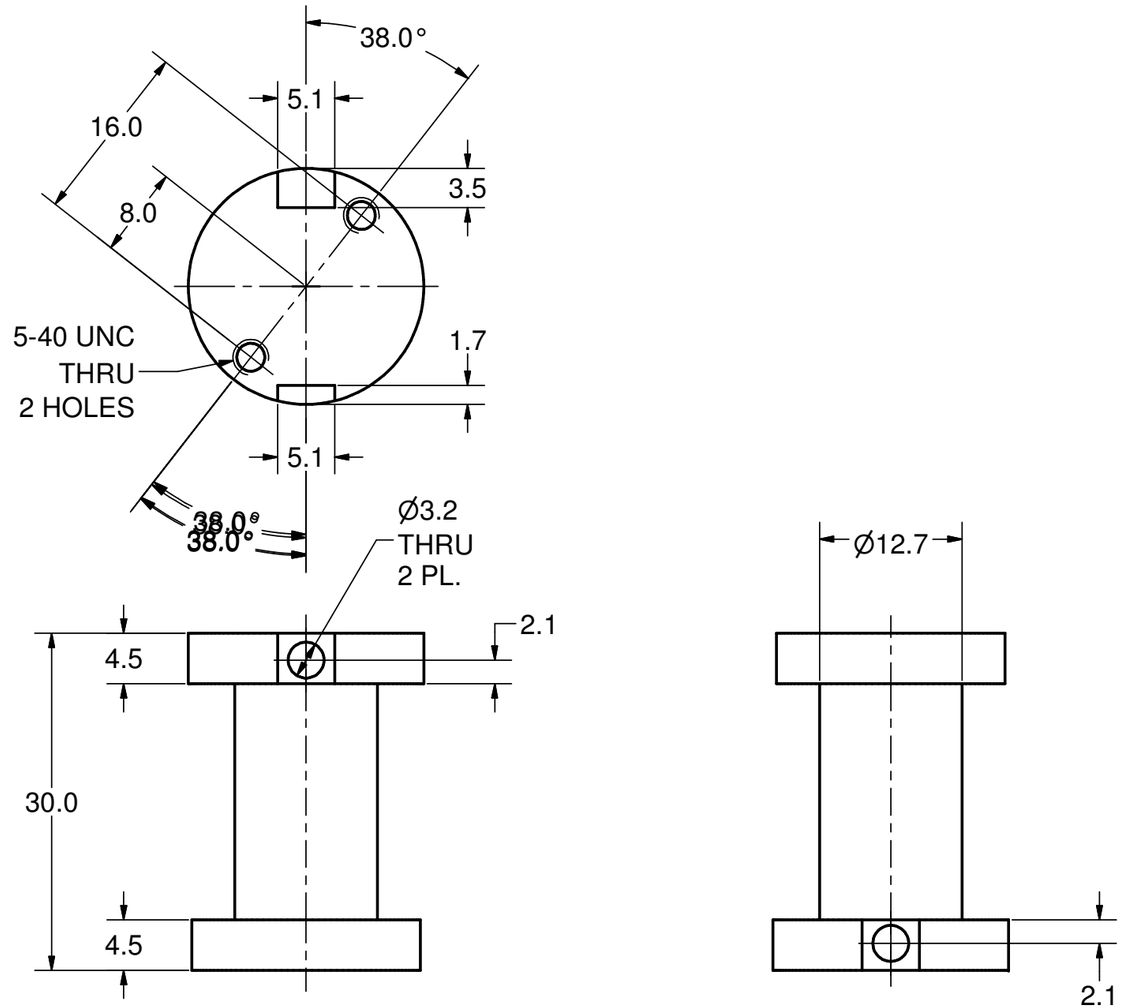

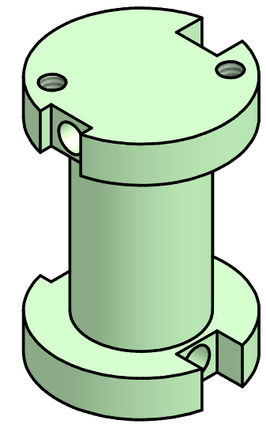

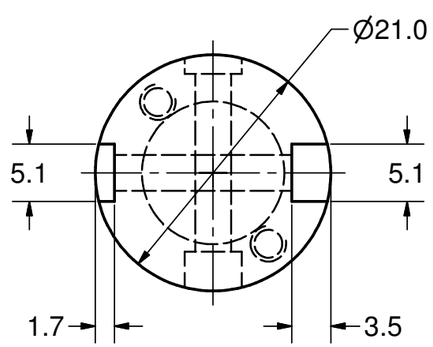

Issued all design changes as Rev C (TIO) - 4/19/07 - SAB

						Rev. C
					Scale : 2:1	mat: G-10
					ASSEMBLY : *75 kW CW Input Coupler*	
				Date	Name	DESIGNATION :
				Drawn	10/5/04	Churanov
				Checked	08-06-05	VM
				Standard		
						COIL HOUSING
						100.810.001
						1
						A3
State	Changes	Date	Name			